TPCT's

College of Engineering, Osmanabad

Laboratory Manual

Refrigeration and Air conditioning

For

Final Year Students

Manual Prepared by

Prof.R.A.PatilTekale

Author COE, Osmanabad

TPCT's

College of Engineering

Solapur Road, Osmanabad

Department of Mechanical engineering

Vision of the Department:

To impart strong foundation in Mechanical Engineering Fundamentals, so that students will be competent professionals to meet the global challenges

Mission of the Department:

To promote scientific & educational activities for facing problems of global competition and prepare engineering students for successful carriers.

College of Engineering

Technical Document

This technical document is a series of Laboratory manuals of Mechanical engineering Department and is a certified document of College of engineering, Osmanabad. The care has been taken to make the document error-free. But still if any error is found, kindly bring it to the notice of subject teacher and HOD.

Recommended by,

HOD

Approved by,

Principal

FOREWORD

It is my great pleasure to present this laboratory manual for final year engineering students for the subject of Refrigeration and Air conditioning to understanduse specific safety knowledge and skills relating to Refrigeration and Air conditioning.

This is a core subject to study and understand the basic concepts to select proper refrigeration cycle and design air conditioning system. This lab manual provides a platform to the students for understanding the Pressure test, leak detection and charging.

This practical background will help students to install, service and repair the Refrigeration and Air conditioning unit

H.O.D

MECH Dept

LABORATORY MANUAL CONTENTS

This manual is intended for the Final Year students of MECH branche in the subject of Refrigeration and Air conditioning. This manual typically contains practical/ Lab Sessions related to RAC covering various aspects related to the subject for enhanced understanding.

Students are advised to thoroughly go through this manual rather than only topics mentioned in the syllabus as practical aspects are the key to understanding and conceptual visualization of theoretical aspects covered in the books.

SUBJECT INDEX:

Dos and Don’ts in Laboratory :-

1. Do not handle any equipment before reading the instructions /Instruction manuals.
2. Do not use an electrical outlet or switch if the protective cover is cracked or missing.
3. Continuously observe the pressure of evaporator and condenser type to avoid damage.
4. Do not start the Tutor if pressure on HP & LP sides is equalized.
5. Do not open charging valve.
6. Strictly observe the instructions given by the Teacher/ Lab Instructor.

Instruction for Laboratory Teachers:-

1. Submission related to whatever lab work has been completed should be done during the next lab session.
2. Students should be instructed to switch on the power supply after getting the checked by the lab assistant / teacher. After the experiment is over, the students must hand over the model of equipment to the lab assistant/teacher.
3. The promptness of submission should be encouraged by way of marking and evaluation patterns that will benefit the sincere students.

Experiment No.1

Tools used in Refrigeration and Air conditioning

AIM: To study different types of Tools used in RAC.

Refrigeration tools are used in performing preventive maintenance and repair on air conditioners, refrigerators, freezers, and automotive air conditioner.
They are as follows:

• **Tube Cutter** – is a refrigeration tool use to cut copper tubing from sizes 1/8” to 1/2” outside diameter. A larger tube cutter is also available for large tube diameters. Tubes are mark first before cutting. Slight pressure is applied to the copper tube during cutting. The burr inside the tube is cleaned with blade reamer.

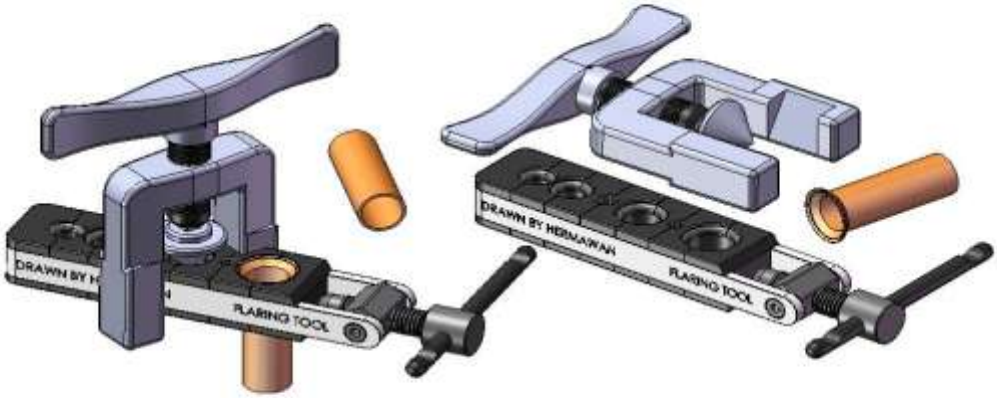

• **Flaring Tool** – is a refrigeration tool use to spread the copper end outward until a flare is formed. File and ream the copper tube before flaring. The copper tube is inserted into the flaring block with 30% of its diameter protruding. Turn the flaring yoke slowly until the flare is completed. Remove copper tube and inspect for defects.

• **Swagging Tool** – is a refrigeration tool use to expand the inside diameter of a copper tube so that the resulting diameter is the same as the outside diameter. It is used to join two copper tubes of the same diameter. Clamp the copper tube by the flaring block so that an 'equal to the outside diameter' of the copper tube length is to be swagged.

• **Brazing Torch** – is a refrigeration tool use in soldering the joints of two copper tubes together. 800 degrees Fahrenheit is required to solder copper tubing. Map gas is generally used in these application, although oxygen-acetylene is also popular except they are bulky and heavy. It can reach a temperature of 3600 degrees Fahrenheit. When brazing copper tube joints, do it in a well-ventilated area.Prolong inhalation can cause cancer.

• **Copper Tube Bender** – is a copper tube bending refrigeration tool. It has a three-size molded half-round wheels. The most common sizes are from 1/4 of an inch diameter, to 5/16, then 3/8. Copper tubes are bent beautifully using this professional bending tool.

• **Adjustable wrench** – is a wrench with an adjustable jaw. A six inch adjustable wrench is very useful in the field of refrigeration repair. It can accommodate nuts and bolts' sizes from 1/8 of an inch to 1 inch. It can fit into the tool box easily.

• **Flat Edge Screw Driver** – is a screw driver with a flat driving end. An 8 inch screw driver with a blade width of 1/4" is the most useful size. It is always a good idea to have a 1/8" blade and a 3/16" blade around with you.

• **Allen Wrench** – is an angle hexagonal driving wrench. They are made of hardened steel. You will need allen key when removing the squirrel caged fan of a window type air conditioner. The circular fan of an indoor unit is fastened with an allen screw.

• **Long Nose Plier** – is a plier with a long pointed nose. A 7 inch long nose plier is very useful and is a good addition to your tool box. You will find the many uses of a long nose plier; from hard to-reach areas like removing a clip from a fan or holding the copper tube when brazing alone.

• **Slip Joint Plier** – is a mechanical plier with a slip joint in order to adjust the size. Either for fastening a 1/2" pipe to loosening a 1" water pipe, it is a very handy tool to have. I have with me a 10" slip joint plier all the time.

• **Electrical Plier** – Insulated plier use by electrician. An 8 inch electrical plier is a must have in your tool box. There are time when it is necessary to remove a live fuse from a fuse box. Or arranging the stranded wires.

• **Pipe Wrench** – is a wrench for fastening tubes and pipes. A 12 in pipe wrench must be in your tool box as well. Sometimes we have to remove a rounded hex nut.

• **Nut Drivers** – Hand held driver to drive or remove hex nuts or bolts. Mostly applicable to deep down places where our hand is not able to reach. Straight hand grip type and the T-type drivers are available for you to choose.

• **Box Wrench** – Hand held box type wrenches. They came in from 1/4 of an inch to 1-1/4 inch size. Usually they are in combination as far as the size is concern. A practical tool for assembling and disassembling home air conditioner and automotive air conditioner compressors.

• **Open Wrench** – Open end hand held wrench. Their sizes are from 1/8 of an inch to 1-1/4 of an inch. It is most useful when you are removing a machine bolt where access is only 50 to 75 percent, or the area is restricted that the wrench can make only one half turn.

• **Flat File** – flat hardened steel with cutting ridges. Used for filing a newly cut copper tube ends to square it. To remove burrs from steel brackets. File surface joints so that they can fit squarely.

• **Round File** – round long hardened steel with cutting ridges. Round file is very useful in enlarging a hole by filing. Cleaning a rusty steel tube, removing a clogged from a drain hole. Enlarging a flat washer hole to fit the larger bolt Or to shape a certain parts through filing. Making prototype spare parts for hard-to-find spare.

• **Carpenter's Saw** – a hand tool with tooth blade used to cut wood. Fabricating wooden frame for a window type air conditioner, cutting wooden sticks to be used to elevate an air conditioner unit.Fabricating elevated stand for a split type stand alone indoor unit.

• **Tape measure** – steel tape measuring device. Put one in your pocket whenever you are going out into the field. Either you are going to make measurement for the length of the copper tubing you will need for a certain project, or measuring the volume of a room.

• **Hack Saw** – a hand tool with tooth blade used to cut iron pipes or iron bars, maybe you need to shorten the length of a certain PVC pipe, or fabricating a bracket for a new air conditioner. Making a new home air conditioner installation.Cutting the window frame so that the new air conditioner will fit.

• **Electric Drill Gun** – is also a good refrigeration tool a refrigeration mechanic should have. We measure the size of a drill gun by the size of the chuck. I have with me a 1/2 inch chuck, and it is all I need in doing different things, like installing a new compressor and I need to make new holes for the anchor bolts.

• **Bench Vise** – a refrigeration tool with two jaws for holding works. Most of the time we need a vise to hold the copper tube so that we can braze the joints correctly. Or we must clamp the machine bolt so that we can remove the hex nut. Or simply clamp a piece of steel bar so that we can cut it into the size we need.

• **Yoke Vise** – a pipe vise. It is good to have a yoke vise in your working bench. Yoke vise is a common refrigeration tool a mechanic should have. Either you are lengthening your water pipes or removing electrical conduit pipes, a yoke vise clamps the tubing without deforming them.

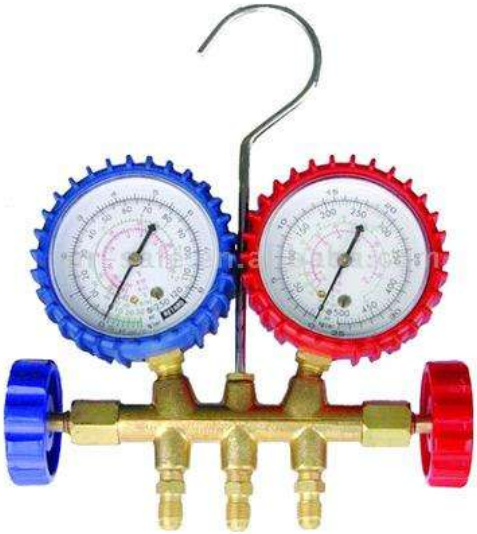

• **Gauge Manifold** – refrigeration tool pressure gauges. Whenever you are reprocessing a refrigerator, or replacing a new compressor for a freezer, or charging refrigerant to your automotive air conditioner, you need a gauge manifold to tell you if you are doing it right.
If you plan to repair your own refrigeration appliances, and you might consider going into servicing, you must have the above basic tools. It's an investment but consider the money that you can save if you do it yourself.

Conclusion – Hence we have studied different types of tools which are used in maintenance.

Experiment No.2

STUDY OF HOUSEHOLD/DOMESTICREFRIGERATOR

AIM: To study the working of household refrigerator

PRIOR KNOWLEDGE:

Heat Pump, Refrigerator, Vapour compression refrigeration cycle.

DESCRIPTION:

The household refrigerator works on vapour compression refrigeration cycle.The refrigerant vapour is compressed by means of compressor to a pressure atwhich temperature obtained at the end of compression will be more then atmosphereso that at this high temperature it will reject heat to atmosphere and will getcondensed. The condensate is then allowed to pass through a capillary so that thepressure and temperatures and lowered. Capillary device acts as a throttling unit. Atlow pressure and temperature refrigerant is supplied to the evaporator where load iskept, it absorbs the heat and refrigerant get converted into gaseous phase and it is again supplied to compressor and cycle is repeated.

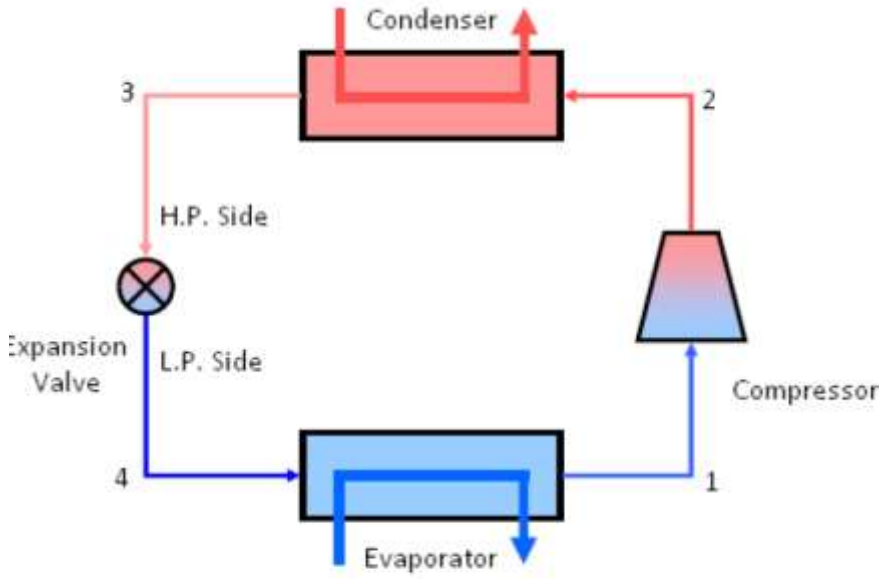

Fig.1 Simple Vapour Compression Cycle

2

The evaporator in the household refrigerant is always fitted in thecabinet of the refrigerator at the top potion and the concealed type of evaporatorused. The condenser is mounted at the back of the cabinet. The expansion deviceused in household refrigerator is capillary tube. Capacity of

household refrigerator isexpressed in terms of litre. The refrigerators manufactured by various manufacturesare available in capacities ranging from 90 litres to 380 litres. (The capacity ofhousehold refrigerator is expressed in terms of litre, it is defined as the amount of water occupied in the cabinet. It specifies the space available for keeping various commodities in refrigerator.)

Fig.

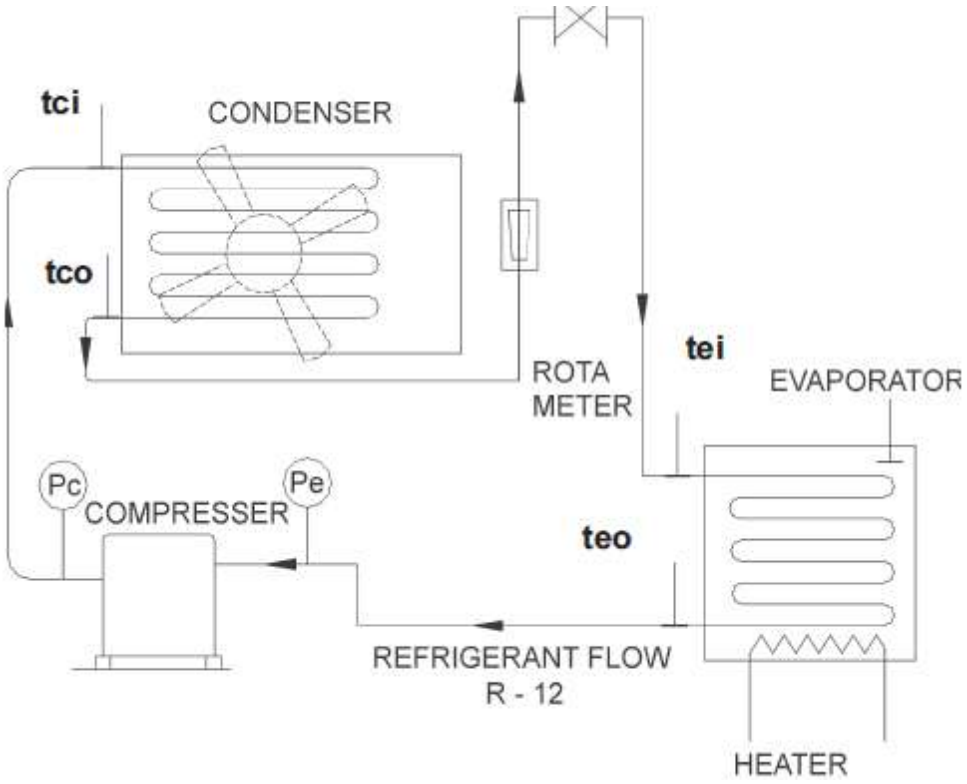

Fig.2 Schematic diag. of Refrigerating Parts

In the household refrigerator the air circulation inside the cabinet is maintained by natural convection. The temperature in freezer is around - 5 to -10 c, the temperature is increased at the bottom most portion where vegetable crisper is kept. Also there is provision for keeping stuff like eggs, water, etc. fitted in the door of refrigerator.

The refrigerator body is insulated with insulating materials like PUF(Polyainthene foam). Magnetic strips are provided to avoid thermal leakage throughdoors.

ATTAINMENTS OF FREEZING AND DEFROSTING IN REFRIGERATOR:

Freezing and Defrosting done by two ways:

1. Thermostat

2. Defrosting Unit

1. Thermostat:

Thermostat is used to control the temperature in the refrigerator by varyingtime to idle time ratio. The bulb of the thermostat is clamped to the evaporator orfreezer. The thermostat bulb is charged with few drops of refrigerant.The temperature at which compressor motor starts, by closing the thermostatcontacts is called cut-in temperature. Cut-out temperature is higher then cut-intemperature and the difference between the two is called differential. Higher is the differential, longer is the running time and less is the idle time of refrigerator. Bychanging range adjustment and differential, any cut-in and cut-out temperature canbe adjusted for maintaining desired temperature in the refrigerator.

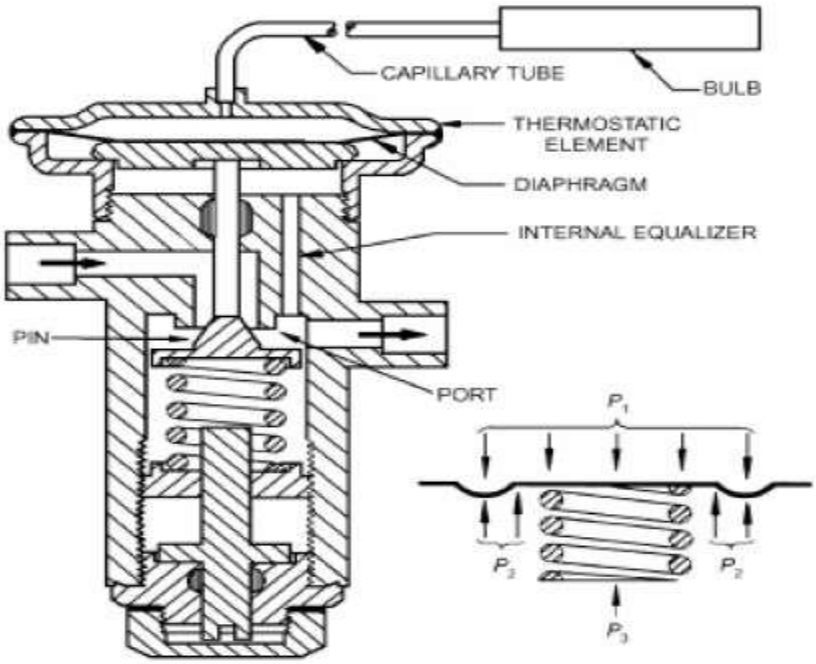

P1 = ThermostaticElementsPressure

P2 = EvaporatorPressure

P3 = PressureEquivalentOf theSuperheat

As the temperature of the bulb increases, gas pressure in the bellowassembly increases, and this closes the compressor motor circuit and refrigeratorstarts. As the compressor runs, the thermostat bulb is cooled; gradually reducing thepressure in the bulb and this opens the circuit when desired temperature is attained.The refrigerator is provided with a control knob. By operating knob desiredtemperature can be maintained.

2. Defrosting:

The freezing of moisture on evaporator coil is called as frosting. The frostthickness increases due to frequent door openings, as the frost thickness increasesthe heat transfer through the coil decreases. This increases the running time ofrefrigerator and hence the power consumption. Therefore regular defrosting must bedone when frost thickness increases above certain limit.

Generally following methods are used for defrosting.

i) Defrosting by stopping unit:

Stop the unit, keep door open and chill tray must be kept in defrost position tilldefrosting takes place.

ii) Timer Defrosting:

The most popular defrost system used in household refrigerator is clock timerdefrost cycle. The number of defrost periods varies from one to four in 24 hoursdepending upon timer used. The timer contacts initiate either the defrost cycle orcooling cycle. When the timer is in the cooling cycle, the thermostat control the on-offperiods of the compressor. When the timer is in the defrost cycle. The thermostatcannot turn the compressor ON. In other words, thermostat has no control on thecompressor when the defrost timer is in the defrost position.The defrost cycle terminates approximately 20 minutes after being turned on.The defrost heater is wired in series with a bimetal thermostat whose contacts willopen at some predetermined temperature, there by disconnecting the heater. Thelength and time it takes for the contacts of the bimetal thermostat to open isdetermined by the amount of frost on the evaporator.

DO AND DON'T – WHILE USING REFRIGERATOR:

1. The refrigerator should be placed away from the heat source such assunrays, heating appliance, cooking gas, etc.

2. Install the refrigerator away from wall at least by one foot which providesgood air circulation over condenser.

3. Hot fluids should not be kept in refrigerator.

4. Keep door openings at minimum.

5. Strongly flavored food must be kept wrapped.

6. Vegetables, fruits should be kept in polythene bags before placing into therefrigerator.

7. Clean with soft cloth. No soap, detergent should be used.

IN HOLIDAYS:

1. Remove every stored item including ice trays.

2. Defrost refrigerator.

3. Make refrigerator dry.

4. Disconnect three-pin plug.

5. Leave the door slightly open for movement of fresh air.

RESTARTING:

1. Clean the Refrigerator.

2. Connect 3-pin plug.

3. Load the refrigerator after temperature has stabilized.

CONCLUSION:

The domestic refrigerators now a day are becoming essential part oflife. These refrigerators are available in different capacities as well as differentworking models. These are having single door double door options, frost freerefrigerators; quick chill refrigerators are also available. To make the refrigeratorssmart now a day the condensers are sealed and refrigerators are mode flat back. The compressors used in household refrigerator are hermetically sealedreciprocating units. Now a days noise free rotary hermetically seals compressors arealso used.

The refrigerant R-12 which was popularly used in household refrigerators isdiscarded due to its ODP (ozone depletion potential). It is replaced by R-134(a).

Experiment No.3

StudyOf Leak Detection And Charging Procedure ForRefrigerant

AIM: To study different methods used for detection of leakage of different types of refrigerants, to study effects of non-condensable on the system and to study the procedure for charging the refrigerant into the system,

PRIOR KNOWLEDGE:

Different types of commonly used refrigerants along with their properties (i.e. physical, chemical and thermodynamic), the effect of undercharge or overcharge of refrigerant, the effect of non-condensable on the performance of the system.

DESCRIPTION:

It is well known that the moisture, air and other non-condensable are very harmful for the refrigeration system. The moisture present may choke capillary tube and also if moisture is combined with hydrochloric and hydrofluoric acids they are having ill effects on the system. The presence of air and non-condensable increases the head pressure of the system. As the head pressure goes higher, the compressor motor draws more current. Also higher head pressure reduces the refrigeration capacity of the unit appreciably. The temperature rise of the compressor accelerates the chemical action inside the system.From above points it is clear that moisture, air and non-condensable should be removed from the refrigeration system to the maximum possible extent. Hence before system can be charged with a refrigerant it should be thoroughly evacuated and dehydrated by drawing a high vacuum. If this is not done at the initial stage itself, a clean system can near be attained. After the completion of erection the plant should be checked and the refrigerant should be charged into the system. During working also there is chance of leakage in a refrigeration system. Finding a leakage is the job of patience. The approach should be to find leak rather then concluding that there are no leaks on a cursory check. Apart from the cost of charging refrigerant into a leaky system, a shortage of refrigerant can cause real danger to the plant.Therefore leak testing should be done periodically without fail in all seriousness and with full concentration.

LEAK TEST METHODS:

Different leak testing methods one employed for different types of refrigerants.

1. AMMONIA, R12, R22:

i) SULPHUR TEST METHOD:

Burning sulphur stick shows a dense white smoke if ammonia is present. The burning sulphur stick is passed around all the joints and suspected leaky points for the appearance of smoke. This test is applicable for tracing minute leaks only.

ii) SOAP BUBBLE TEST:

This test may not be very effective to trace very minute ammonia leak as it is soluble in water. Fortunately, ammonia is having plungent odor, a heavy leak can be easily detectable.

iii) LITMUS TEST:

Wet litmus paper (Phenolpthalene paper) which turns red in contact with ammonia can also be used to detect leaks.

2. HALOGENATED REFRIGERANTS:

Soap solution, Halogen leak detector, Halide torch and Electronic leak detectors are the methods used to trace leaks in halogenated refrigerants

i) HALOGEN TORCH:

A halogen torch can detect minute leaks, which are not possible to trace with soap solution. The presence of trace of refrigerant can change the light blue colour of the detector flame to green or deep blue. The end of the explorer tube of the detector is carefully passed over the joints and suspected leakage points. If there is a leak, the refrigerant can be drained in with the suction effect at the end of the explorer tube to the hot copper or brass portion of the burning torch. The refrigerant reacts with the metal to form copper chloride, which produces the color change in the flame.

A well maintained halogen torch is claimed to detect leaks of the order of about 15 gram per year.

ii) Electronic Leak Detector:

This is an electrical instrument. In this also an explorer tube is used to suck the refrigerant from the leaky points to an instrument. A vibrator is provided to suck the refrigerant through the

explorer tube. A filter is also provided at the tip of the tube to prevent atmospheric dert entering the instrument. A heating element in the tube heats the refrigerant drawn in and the refrigerant creates a variation in the current flow of the instrument. The extent of variation of the current is an indication of theamount of leak. The current variation is read on the dial of the instrument. The change of current actuates a relay which operates an indicating light.

These detectors are capable of detecting refrigerant leaks of the order of about 0.3 gm per year. The electronic leak detector is a very sensitive instrument and should be handled and stored carefully.

CHARGING PROCEDURE FOR REFRIGERANT:

The vacuum pump mounted on the charging kit is of rotary type. Also metering system is provided so that we can charge sufficient quantity of refrigerant.

PURGING:

Many times during the operation of the system, the air leaks inside the system. It is necessary to remove the air for maintaining the efficiency of the system. Owing to the presence of air in a system, the high-side pressure and load on condenser increase. The method of removing air from the system is known as purging. During purging, the compressor discharge valve is intermittently opened for few seconds at a time. Air and few grams of refrigerant vapour escape under highpressure. A noticeable pressure and temperature drop in the system occurs and normal operating pressure is established. The refrigerant is added from outside if excessive purging is occurred.

CONCLUSION:

The refrigeration system must be free from non-condensable and correct quantity of refrigerant must be there in the system for good performance. At the time of charging of refrigerant the lubricating oil of required grade must be added to the compressor.

Experiment No.4

Study Of Refrigeration Controls Used In Refrigeration And Air Conditioning

AIM: To study different controls used in refrigeration and air conditioning equipments for better performance.

PRIOR KNOWLEDGE:

Basic principles of RAC and mechanical measurements.

DESCRIPTION:

For efficient and safe working of refrigeration and air conditioning systems

different control devices are used these are listed as below.

1. Flow control devices.
2. Safety devices.

1. Flow Control devices:

The major devices under this category air the expansion devices. The purpose of the expansion devices is two fold : it must reduce the pressure of the liquid refrigerant, and it must regulate the flow of refrigerant to the Evaporator. An expansion device offers a resistance to flow so that the pressure drops resulting in a throttling process. Basically there are two types of expansion devices these are:

1. Variable restriction type
2. Constant restriction type

In the variable restriction type the extent of opening or area of flow keeps on changing depending on the type of control. There are two common types of such control devices viz,

a) Thermostatic expansion valve.

b) Automatic expansion valve.

a. Thermostatic Expansion value (TEV):

The name may give an impression that it is a temperature control device. It is not a temperature control device and it cannot be adjusted and used to vary evaporator temperature. Actually TEV is a throttling device which works automatically maintaining proper and correct liquid flow as per the dictates of the load on the evaporator. Because of automatic operation, high efficiency and ability to prevent liquid flood backs this value is extensively used.

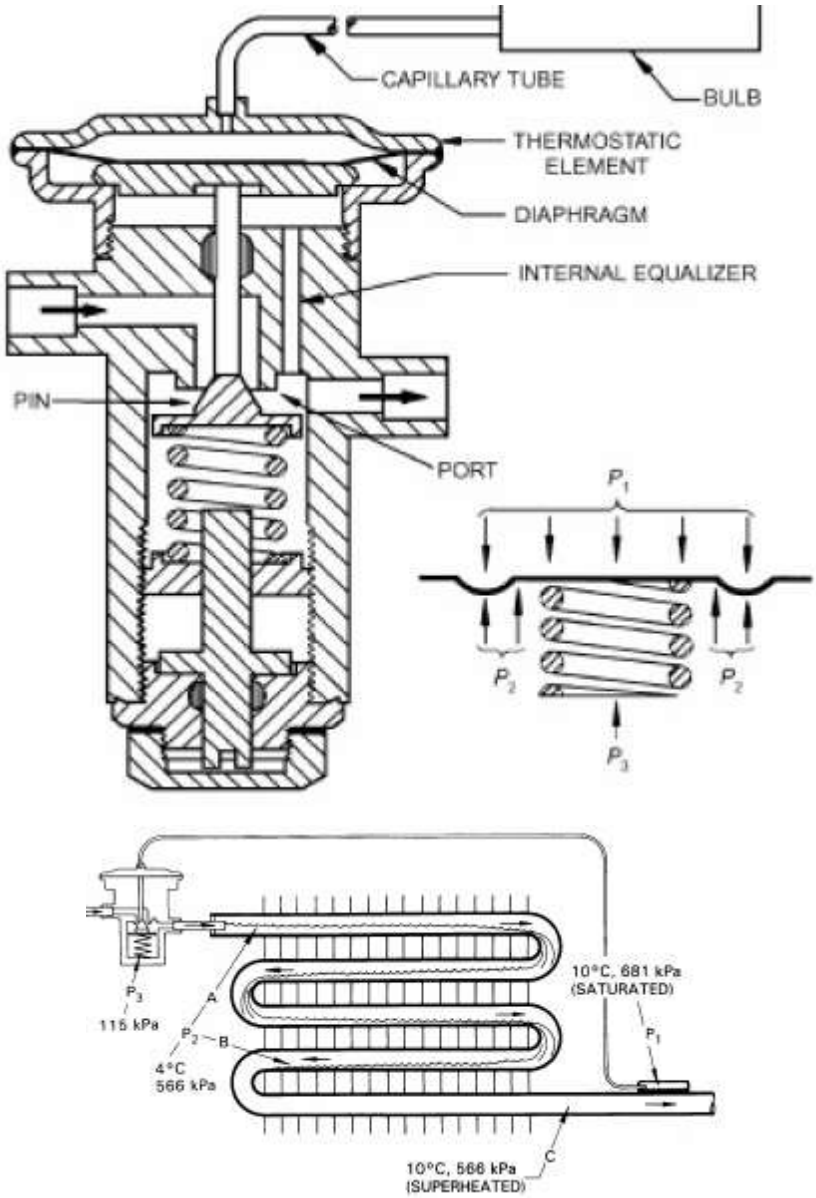

Fig.1 Thermostatic Expansion Valve

P1 = Thermostatic Elements Pressure

P2 = Evaporator Pressure

P3 = Pressure Equivalent of the Superheat Spring Force

The functions of thermostatic expansion value are:

1. To reduce the pressure of the liquid from the condenser pressure to evaporator pressure.
2. To keep the evaporator fully active.
3. To modulate the flow of liquid to the evaporator according to the load requirement of the evaporator so as to prevent flood back of liquid refrigerant to the compressor.
4. Pressure P1 in the power element acts to open the valve i.e. to move the valueneedleaway from its seat.
5. The evaporator pressure P2 acts on the bottom side of the diaphragm of the power element tending to close the value.
6. Pressure P3 of the superheat spring also assists in the closing action. Therefore if the power element pressure P1 is greater then the constrained pressure of P2 and P3, the value will open.

It does last two functions by maintaining a constant superheat of the refrigerant at the outlet of the evaporator it would be more appropriate to call it a "constant superheat valve". The important parts of the valve are power element with feeler bulb, value seat, needle and a superheat adjustment spring. The power element is charged with a refrigerant.

The operation of the valve i.e. the closing and opening of the value is controlled by there basic forces. The force balance is shown in fig.

b. Automatic Expansion Valve:

AEV is also called as constant pressure expansion value. As name implies itmaintains a constant pressure in the evaporator. It works on the same principle as the pressure reducing valves used in compressed air lines, oxyacetylene cylindersetc. A schematic diagram of the constant pressure Expansion. Valve is shown in fig.

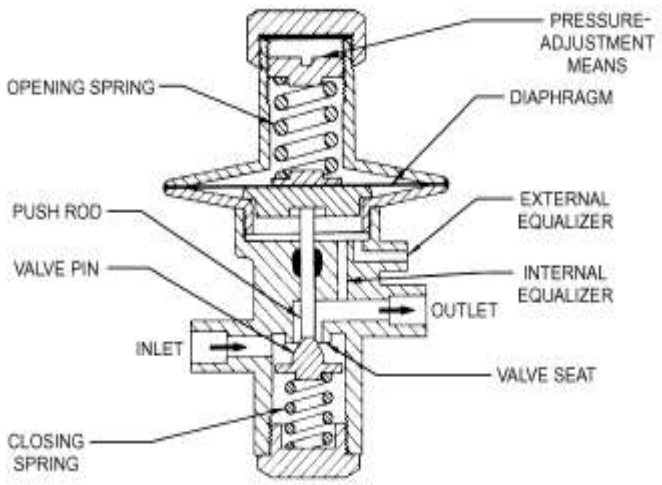

Fig.2 Automatic Expansion Valve

The valve consists of seat and needle- which forms the orifice, a metallic diaphragm or bellow, spring and an adjusting screw. The spring pressure and the atmospheric pressure acts on top of the diaphragm, thereby moving the needle away from it seat that is moving the needle valve in the opening direction.

Theevaporator pressure acts below the diaphragm moving the needle valve towards the closing position. Thus the evaporator pressure and spring pressure oppose each other and whichever is greater will determine the position of the needle with respect to the seat. When the plant is running the value maintain an evaporator pressure in equilibrium with the spring pressure plus atmospheric pressure. The tension of the spring can be varied by the spring adjusting screw. The value operates automatically to maintain a constant evaporator pressure as per the setting of the spring pressure. By adjusting the tension of the spring, the evaporator pressure can be varied. Once a setting is made, the valve functions to maintain a constant evaporator

pressure. Hence it is called the constant pressure expansion valve". Once the plant stops, the evaporator pressure increases due to the vaporization of the liquid left in the evaporator. This increase in pressure acts on the diaphragm against the spring pressure and closes the valve tightly. It remains closeduntil the compressor start again and reduces the pressure in the evaporator. This is a big advantage.

2. Constant Restriction Type:

The capillary tube, a long tube with very small bore comes under constant restriction type expansion devices. The capillary tube is a fixed restriction type device. It is a long narrow tube connecting the condenser directly to the evaporator.

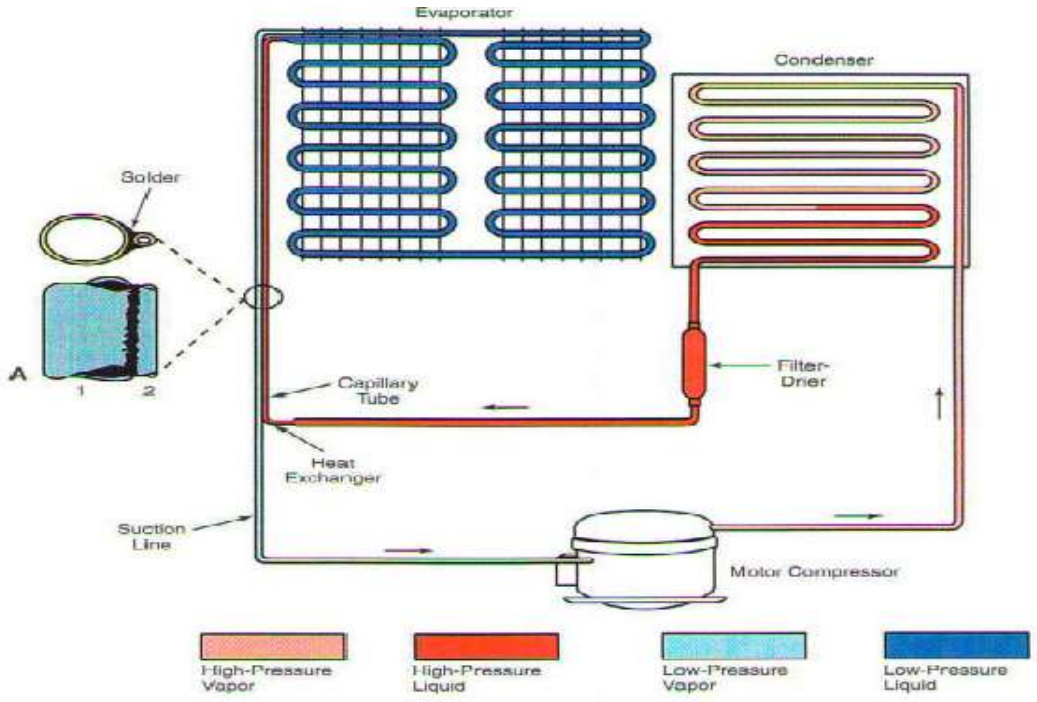

The pressure drop through the capillary tube is due to the following reasons:

1. Friction due to fluid viscosity, resulting in frictional pressure drop.

2. Acceleration, due to the flashing of the liquid refrigerant into vapour resulting in momentum pressure drop. The mass flow through the capillary tube will, therefore be adjusted so that the pressure drop through the tube just equals the difference in pressure between the condenser and evaporator. For a given state of the refrigerant, the pressure drop is directly proportioned to the length and inversely proportional to the bore diameter of the tube. A number of combinations of length and bore are possible for a capillary tube to obtain the desired flow and pressure drop. However, once a capillary tube has been selected, it will be suitable only for the designed pressure drop and flow. It cannot satisfy the flow requirements with changing condenser and evaporator pressures. Even then it is most commonly used expansion device in small refrigeration units such as domestic refrigerators, window A/C, water coolers, etc.

The advantages of a capillary tube are its quite working, simplicity, low cost and absence of any moving part. Also it is found most suitable with on-off control because of its unloading characteristics. Thus when compressor stops it allow high and low pressure to equalize, thereby enabling the compressor motor to restart on no load.Accordingly lower starting torque motors can be used.

2.SAFETY DEVICES:

1. High pressure and low pressure cut-out:

Refrigerant compressors are provided with high pressure (HP) and low pressure (LP) cut outs. High pressure cut-out is merely a safety control. When the head pressure increases beyond a set point, the HP cutout cycles off the compressor in order to avoid the possible damage to the compressor. When the head pressure subsequently drops, the circuit is one again closed and the compressor starts. Because of the possibility of scale formation in condenser tubes and the failure of water supply high pressure cutout are essential in the system with water cooled condensers. These cutouts require manual setting. The low-pressure cutout is used both as safety control as well as temperature control. The evaporator governs the suction pressure. A low-pressure cutout is actuated by change in suction pressure and can be indirectly used to control the evaporator temperature.

2.Starting relays:

The relays are generally used in hermetic type units. It allows the flow of electricity through the starting winding of the motor and disconnects the starting winding or starting capacitor from the circuit when the motor reaches 75% of its rated speed.

There are two types starting relays.

1)Current relay

2)Voltage relay.

1). Current relay:

The current relay is used primarily with capacitor start induction motors for disconnecting the starting winding and starting capacitor from the circuit. It is a Magnetic type relay and actuated by the change of current flow in running winding during starting and running periods of motor.It consists of few turns of copper wire in which soft iron

plunger is free to more up and down. This soft iron plunger is free to more up and down. This soft iron plunger may be called electronic net. It is connected in series with the running, winding and the contact points, which are fitted near the electromagnet, are connected in series with the current relays with the starting winding. When the motor is energized,the current flow through the relay in the runningwinding. In the starting, the magnetic field produces around the relay and attracts the plunger to close the contact thus energizing the stating winding. The speed of the motor increases gradually and when it reaches 75% of its rated speed, the motorcurrent and magnetic field of the relay decreases. Permitting the contact points to open. Then motor runs on running winding alone.

2. Voltage Relay:

The voltage relay is growing in popularity, especially in the larger units. Its operation depends on the increase in voltage as a unit approaches and reaches its rated speed. In construction, the voltage coil made of many turns of wire as compared with current coil which is made of few turns of heavy wire and is connected parallel with starting winding. A set of content points are connected in series with the starting capacitor and closed when the motor is at rest.

When the supply is connected to the motor, the motor starts up and increases its speed then the voltage in the starting winding increases along the line voltage because of capacitor in service with this winding. The higher voltage creates more in magnetism in the relay coil, which attracts the plunger, the contact point opens and disconnect the starting capacitor from the circuit.

Experiment No.5

A) Trial On Mechanical Heat Pump

Aim: To Study Heat pump and Calculate its COP

Prior Knowledge:

Basic concepts of Heat Pump and various equipments used in testing rig. Use

of Mechanical heat pump in Refrigeration.

Introduction: Now a days, energy conservation is becoming very important. Engineers have started Use of heat pump system for commercial and industrial buildings to save energy.

Heat pump is the modern expression for the refrigeration system in which heat discharged at the condenser is of prime importance. Heat pump is a device which collects heat from one source and delivers it to another source using refrigeration cycle. The medium being cooled serves as heat source. Heat is picked up by the refrigerant, which is pumped to the higher level by the compressor and given to the medium cooling the condenser, so that it can be used practically.

The heat pump required the availability of a dependable heat source in sufficient quantity that can supply heat to evaporator (or can be cooled by it). The basic heat sources that normally used are air, water and earth. When heat pumps are installed, frequently provision is made for both, heating and cooling services to be supplied simultaneously to the separate zones of the building.

Precautions:

- Make proper earthing for the unit.
- Make sure that the storage tank carries sufficient quantity of water.
- Do not start the equipment if
  1) Pressures on H.P. & L.P. sides not equalized.
  2) Condenser and evaporator flow rates are not maintained.
- The charging valve provided should not be opened unless required for charging.
- Do not increase the water flow rates beyond limit.
- For restarting the plant wait for some time.
- Drain the water from tank when not in use.

Procedure:

1. Switch ON the main switch and then start the pump.
2. Start the water supply to both, condenser and evaporator and adjust the flow rate to predetermined value.
3. Now, start the compressor within a short period, clear liquid refrigerant flow will be seen in the rotameter.
4. After some time, the pressure of refrigeration system will become stable. Allow the plant to run for at least half an hour. During testing, see that water flow rates are constant and not varying.
5. Allow the plant to attain steady state. Check for steady state by taking the readings periodically.
6. Take all readings as mentioned in the observation table, competing one set of observations.
7. By varying the water flow rate of condenser, effect of sub-cooling can be studied. Similarly, by varying water flow rate of evaporator, load on the plant can be varied.

The Apparatus:

Mechanical heat pump is a table mounted unit which uses water as a heat sources and sink for both cooling and heating purposes, i.e.it is a water to water heat pump.

The apparatus consists of the compressor is mounted centrally and both evaporator and condenser are mounted on either sides of compressor. All the components are mounted on the main unit and separate control panel is provided in which measurement of temperature and compressor power can be done. A separate storage tank is provided with a self-priming fractional horse power monoblock pump with flow control arrangement for constant velocity flow through the circuit.

To expand the range of experimentation, control valves are provided in the water circuit so that water flow rates can be changed and different experiments are possible over a wide range of conditions.

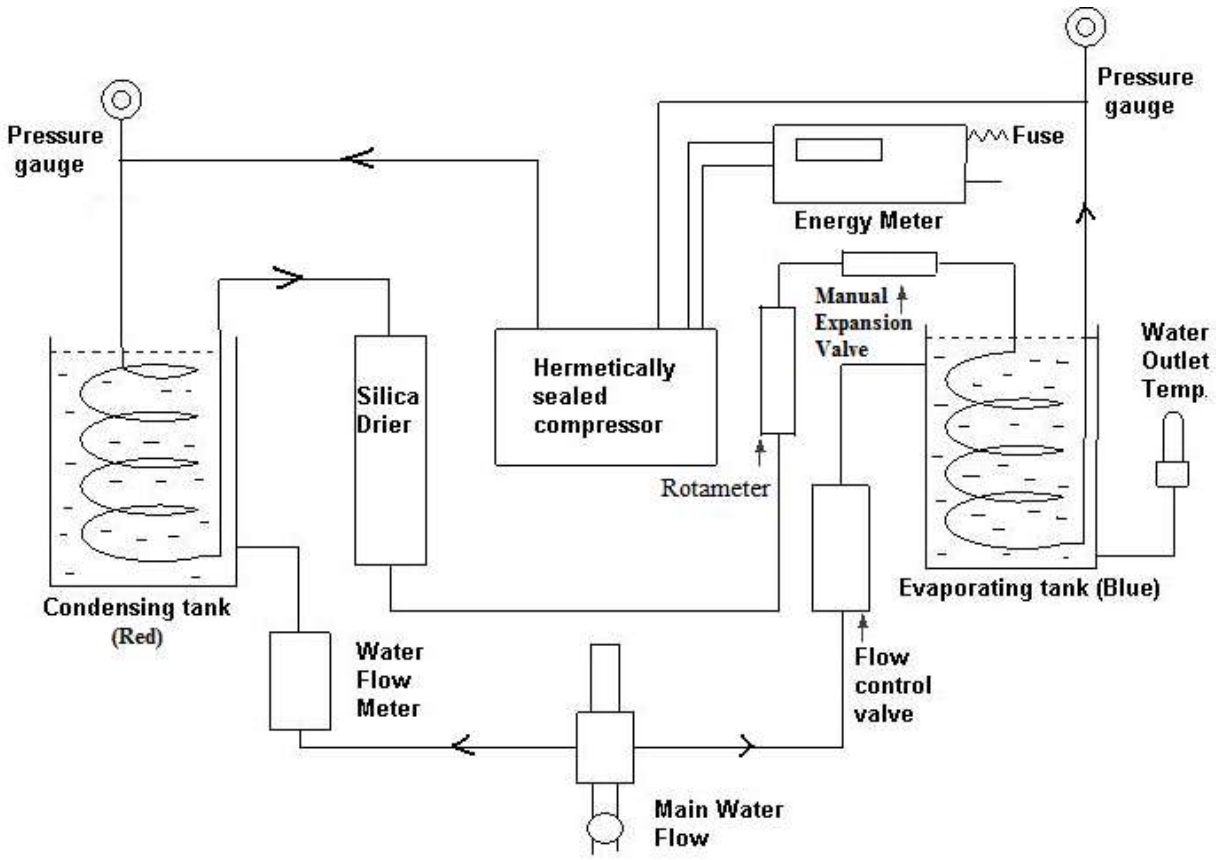

Fig. Mechanical Heat Pump

Observation Table:

Refrigeration cycle

Sr.No.	Description	Symbol	Readings
1	Condensing Pressure	Pc	
2	Evaporator Pressure	Pe	
3	Flow rate of refrigerant in LPH	Mr	
4	Condensing inlet Temp	T1	
5	Condensing outlet Temp	T2	
6	Evaporator inlet Temp	T3	
7	Evaporator Outlet Temp	T4	
8	Compressor energy -Time for 10 Flashes	Sec.	

Condenser Side

Sr.No.	Description	Symbol	Readings
1	Water flow rate in LPH	Mc	
2	Water temp inlet	T6	
3	Water temp Outlet	T5	

Evaporator Side

Sr.No.	Description	Symbol	Readings
1	Water flow rate in LPH	Me	
2	Water temp inlet	T6	
3	Water temp Outlet	T7	

Calculations:

A) Plant operating as Refrigeration cycle:

1) Theoretical COP= $\frac{Heo - Hei}{Hci - Heo}$

2) Actual COP= $\frac{Heat\ absorbed\ \ in\ evaporator\ \ from\ \ water}{compressor\ \ work}$

Heat absorbed in evaporator from water= $M_e X\ C_P\ X\ \Delta T_e$ kj/hr

Where
M_e= mass flow rate of water in Evaporator Kg/hr
C_P = Specific heat of water =4.2 KJ/kg^{0}c
ΔT_e= Temp. Diff. of Water in Evaporator
Compressor Work=$\frac{10*3600}{tc*EMC}$

Where
T_c= Time for 10 flashes of energy meter in sec
EMC= Energy meter constant=3200 Flashes/Kwhr

3) Condenser Heat output = $M_c X\ C_P\ X\ \Delta T_c$ kj/hr

M_c= mass flow rate of water in Condenser Kg/hr
C_P = Specific heat of water =4.2 KJ/kg^{0}c
ΔT_c= Temp. Diff. of Water in Condenser

4) Cooling capacity of plant=$\frac{Heat\ \ absorbed\ \ in\ evaporator\ \ in\ \ kj/hr}{12600}$ $Tons\ of\ Refrigeration$

B) Cycle operating as Heat Pump

1) Theoretical COP= $\frac{Hci - Hco}{Hci - Heo}$

2) Actual COP= $\frac{Heat\ \ given\ in\ conenser\ \ to\ \ water}{compressor\ \ work}$

Conclusion: With the help of above data we can determine the COP of mechanical Heat Pump

Actual COP=

Theoretical COP=

Experiment No5

B)Trial on Ice Plant Test Rig

Aim: To study Ice manufacturing plant and calculate its COP.

Prior Knowledge:

Basic concepts of simple vapor compression cycle.

Introduction: In early days, ice was the only means for producing cold. Although mechanical refrigeration have replaced many of usages of ice now a days, Still ice is used or many purposes for e.g. short term preservation of foods or in cold beverages etc. This Ice plant trainer uses ice cans system. The cans filled with fresh water are kept in a tank in which brine is circulated. The brine is cooled by refrigeration system which in turns cools the water in cans and ice formation takes place.

Working of Ice Plant:

The ice plant works on vapour compressor refrigeration cycle. It comprises of four important parts.

1) Compressor:

   It sucks low pressure refrigerant vapour from evaporator and compresses it to high temperature and pressure. This ice plant uses Hermetically sealed compressor.

2) Condenser:

   The superheated high pressure refrigerant discharged from compressor is condensed to liquidin air cooled condenser. The tubes of condenser are provided with fins on outside to improve heat transfer rate.

3) Expansion valve: The high pressure liquid refrigerant is throttled through expansion device where its pressure is reduced. Plant uses Thermostatic Expansion valve.

4) Evaporator:

   The metered liquid refrigerant is admitted through expansion valve to evaporator. The evaporator is made up of copper tube suitable length bend in suitable shape and is dipped in brine. The refrigerant during evaporation absorbs heat from brine solution. The secondary refrigerant is calcium chloride. The brine is circulated in tank with help of brine agitator. The agitator is a motor driven impeller. The ice cans are made out of galvanized sheet and proper arrangement is made to dip the cans in brine tank. The fresh

water is added in all cans and then all cans are arranged in tank properly after confirming the brine temperature at 0^0c. The water from cans is at higher temp than brine so it loses heat energy to brine which in turn is absorbed by refrigerant circulated through evaporator and gradually formation of ice takes place. The ice cans are provided with taper on both side so ice block can easily removed from cans.

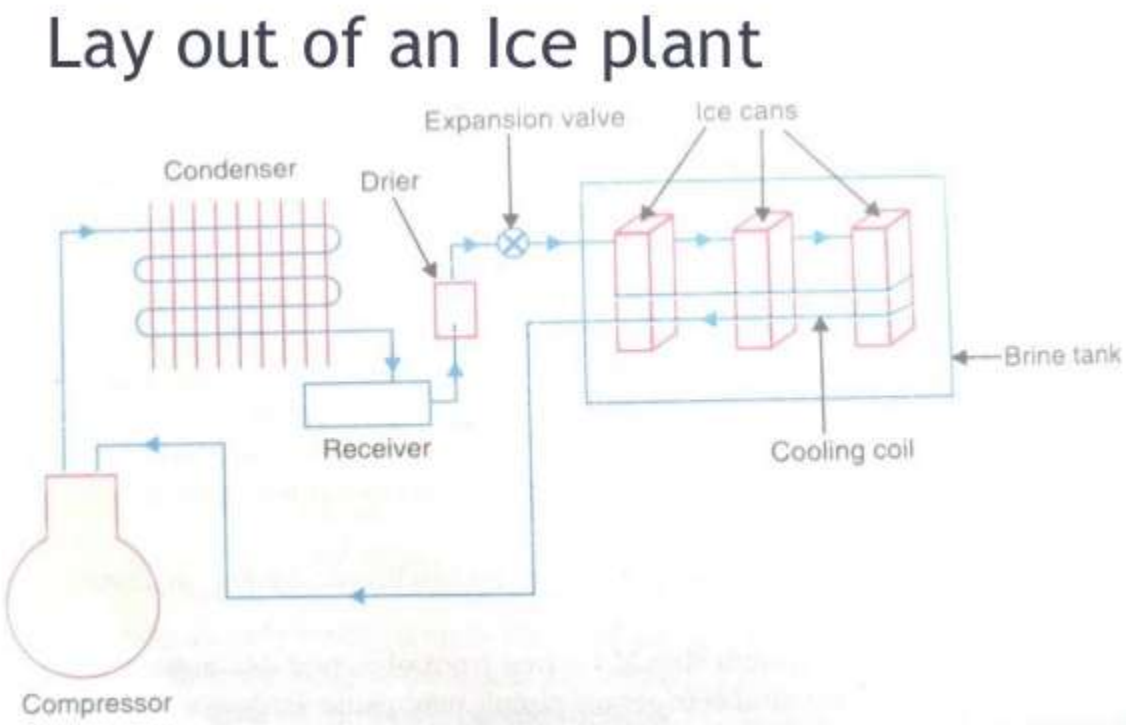

Test Procedure:

Brine is prepared by adding 12 kg of calcium chloride into water and is filled in tank upto the line mark. Put on refrigeration system & agitator, Wait for some time and obtain 0^oc Temperature of brine. The temp of brine is measured with temperature indicator T5. The weight and temp of water from each cans be measured. Now load cans slowly in brine solution. Note down different readings Like high pressure ,low pressure, different temperatures of refrigerant (T1,T2,T3,T4,T5) as per given in observation table. As time passes more and more ice flakes will be formed and after some time total ice formation in ice can will takes place. Note down time required for formation of ice. When ice is needed the requird can is taken out of main tank. Tap water is poured outside the can, so

that ice will be separated from walls and ice slab can be obtained very easily. This is called thawing.

Precautions:

- Run the unit in good ventilated space.
- Please check level of brine in tank before starting plant.
- Before loading ice cans , ensure that the brine temp. is 0 ^{0}C & then load ice cans.
- Do not frequently open the door of brine tank.
- Do not run plant empty for long time.
- Always use the soft water.
- Start the plant once in a week.
- Operates all switches gently.

Observation Table

Sr.No.	Description	Symbol	Units	Readings
1	Condensing Pressure	Pc	Psi	
2	Evaporator Pressure	Pe	Psi	
3	Brine Temperature	T5	^{0}C	
4	Condensing inlet Temp	T1	^{0}C	
5	Condensing outlet Temp	T2	^{0}C	
6	Evaporator inlet Temp	T3	^{0}C	
7	Evaporator Outlet Temp	T4	^{0}C	
8	Compressor energy -Time for 10 Flashes	Tc	Sec	
9	Compressor Current	A	Amps	
10	Temp. of water in cans before loading		^{0}C	
11	No. of Ice cans load		Nos	
12	Total weightof Ice formed		Kg	
13	Time for ice formation		Hrs	
14	waterWeight of Unfrozen water (If found)		Kg	

Calculations:

1) Theoretical COP= $\frac{Heo - Hei}{Hci - Heo}$

   Plot refrigeration cycle on p-h chart & obtain enthalpy values to calculate Theoretical cop

2) Actual COP= $\frac{Refrigeration\ \ effect}{work\ \ Done}$

   Refrigeration effect =$\frac{A+B}{Duration\ \ of\ Ice\ formation\ \ in\ sec}$

   A) Heat removed in formation of Ice=
      Weight of ice formed X Cp X Temp.difference + Weight of ice formed X latent heat of water
   B) Heat removed in unfrozen water (if found)=
      Weight of unfrozen water X Cp X Temp.difference

Work done =$\frac{No.of\ flashes * 3600}{tc * EMC}$

Conclusion: With the help of above data we can determine process of ice manufacturing and we can also find out COP of Ice plant unit.

Actual COP=

Theoretical COP=

Experiment No.5

C) Trial On Refrigeration Test Rig

AIM: To demonstrate vapour compression cycle and to calculate theoretical and actual COP.

Prior Knowledge:

Different types of refrigerants, thermodynamic processes and working of VCC.

DESCRIPTION:

The refrigeration tutor works on vapour compression cycle. The basic components of VCC are

1.Compressor

2.Condenser

3.Expansionvalve

4.Evaporator

1.Compressor:

The high temp refrigerant comes into compressor where it is compressed to high pressure and it is transferred to condenser.

2.Condenser:

The condenser condensate refrigerant where it loses heat energy to atmospheric air and the temp of refrigerant is decreased .The low temperature refrigerant is transferred to expansion valve.

3.Expansion valve:

The refrigerant is entered into thermostatic expansion valve where its pressure is reduced.The low pressure and low temp refrigerant is transferred to evaporator.

4.Evaporator:

The refrigerant absorb heat energy from hot water which is heated by using heater.so because of absorption of heat energy the temp of water is decreased and temp of refrigerant is increased. The high temp refrigerant is entered in compressor and same cycle is repeated.

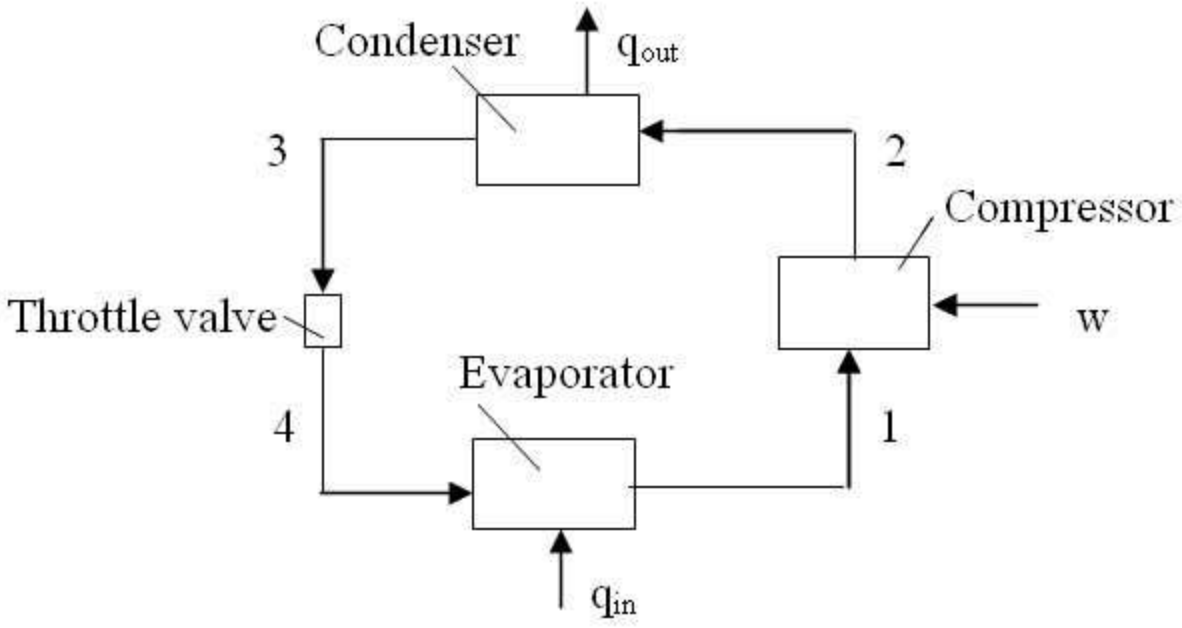

Procedure:

Before putting switch on the supply, confirm that all switches on panel are I offposition.Put on heater switch and give power to heater. This will heat water in evaporator and this can be seen on dial thermometer. Heat water up to temperature of 25·c to30·c.After attending the temp put off heater switch. Now put on the condenser fan and compressor. The refrigerant flow will start.Now ammeter, voltmeter will show the current and voltage for 10 revolution of energy meter for compressor. After some time we will see that temperature of water in evaporator slowly goes down.

Precautions:

- Make proper earthing for the unit.
- Make sure that the storage tank carries sufficient quantity of water.
- Do not start the equipment if
    1) Pressures on H.P. & L.P. sides not equalized.
    2) Condenser and evaporator flow rates are not maintained.
- The charging valve provided should not be opened unless required for charging.
- Do not increase the water flow rates beyond limit.
- For restarting the plant wait for some time.
- Drain the water from tank when not in use.

Observation Table:

Sr.No.	Description	Symbol	Readings
1	Condensing Pressure	Pc	
2	Evaporator Pressure	Pe	
3	Condensing inlet Temp	T1	
4	Condensing outlet Temp	T2	
5	Evaporator inlet Temp	T3	
6	Evaporator Outlet Temp	T4	
7	Water temp in tank	T5	
8	Compressor energy -Time for 10 Flashes	Sec.	
9	Heater energy –Time for 10 Flashes	Sec.	

Calculations:

Theoretical COP= $\frac{Heo - Hei}{Hci - Heo}$

Plot refrigeration cycle on p-h chart & obtain enthalpy values to calculate Theoretical cop

Actual COP= $\frac{Power\ \ consumed\ \ in\ heater}{Power\ \ consumed\ \ by\ compressor}$

Power consumed in heater = $\frac{No.of\ \ flas\,hes\ \mathrm{X}\ 3600}{tf\ \mathrm{X}\ EMC}$

Power consumed by compressor = $\frac{No.of\ \ flas\,hes\ \mathrm{X}\ 3600}{tf\ \mathrm{X}\ EMC}$

Where

t_f–Time for flashes

EMC- Energy meter capacity

Result: With the help of above data we can determine

Actual COP=

Theoretical COP=

3.Quiz on the subject:-

4. Conduction of Viva-Voce Examinations:

Teacher should conduct oral exams of the students with full preparation. Normally, the objective questions with guess are to be avoided. To make it meaningful, the questions should be such that depth of the students in the subject is tested. Oral examinations are to be conducted in cordial environment amongst the teachers taking the examination. Teachers taking such examinations should not have ill thoughts about each other and courtesies should be offered to each other in case of difference of opinion, which should be critically suppressed in front of the students.

5. Evaluation and marking system:

Basic honesty in the evaluation and marking system is absolutely essential and in the process impartial nature of the evaluator is required in the examination system to become. It is a primary responsibility of the teacher to see that right students who are really putting up lot of hard work with right kind of intelligence are correctly awarded.